# PRODUCT SPECIFICATION产品规格书

## NB26733W-1

1.7m Solid Surface Free Standing Bathtub
1.7环保石独立浴缸



(Rough-in Dimensions):
安装尺寸图:
(Unit): mm
单 位: 毫米
(Size): 1700X800X600
尺寸 : 1700X800X600

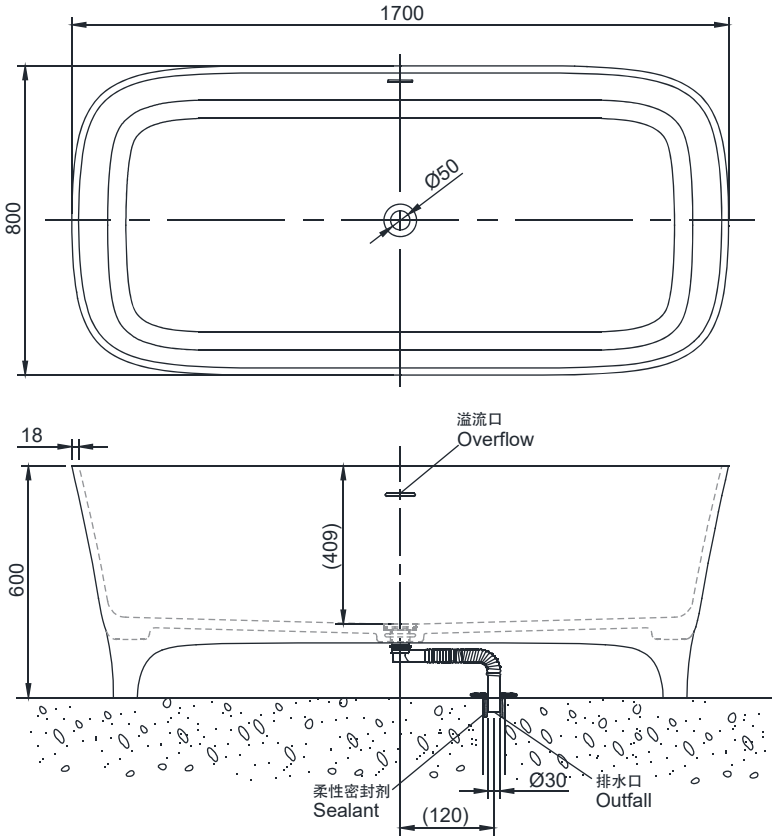


| | |
|---|---|
| Item No.<br>品号 | NB26733W-1 |
| Capacity<br>容水量 | Safety volume:255L<br>浴缸安全容水量:255升 |
| Available Color<br>颜色 | White<br>白色 |
| Materials<br>材质 | Solid Surface<br>环保石 |
| Shipping Package<br>运输包装 | L(长)1810X W(宽)910X H(高)770mm (1set/1CTN 1个/1箱 ) G.W(毛重 ) : 225 kg |

Remarks: Included Press Bath Drain and Brass Drain Pipe.

备 注: 包含按压浴缸去水器和铜质去水器连接管。

INNOCI reserves the right to make changes or modifications on any of its products without advance notice.
INNOCI 艺耐公司保留不事先通知便改变或修改的权利